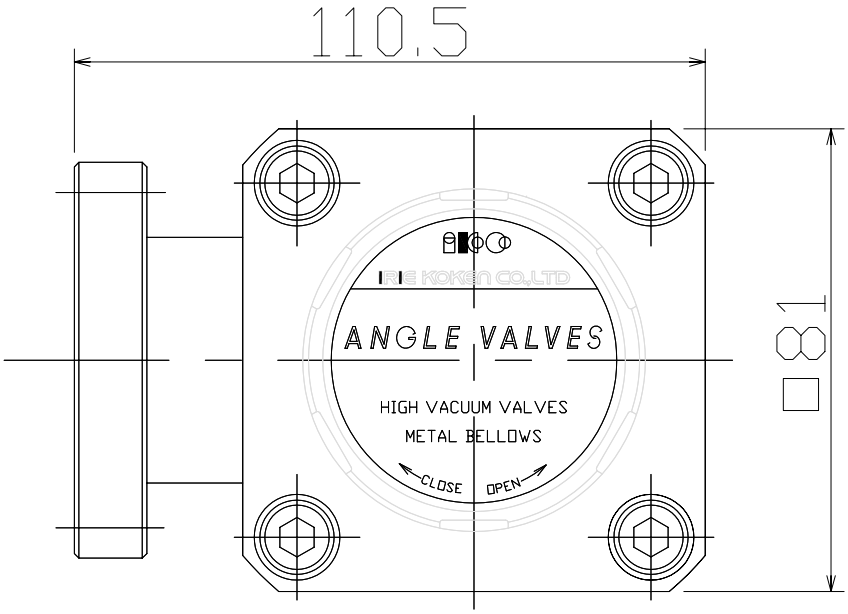
110.5
□81
ANGLE VALVES
HIGH VACUUM VALVES
METAL BELLOWS
CLOSE
OPEN

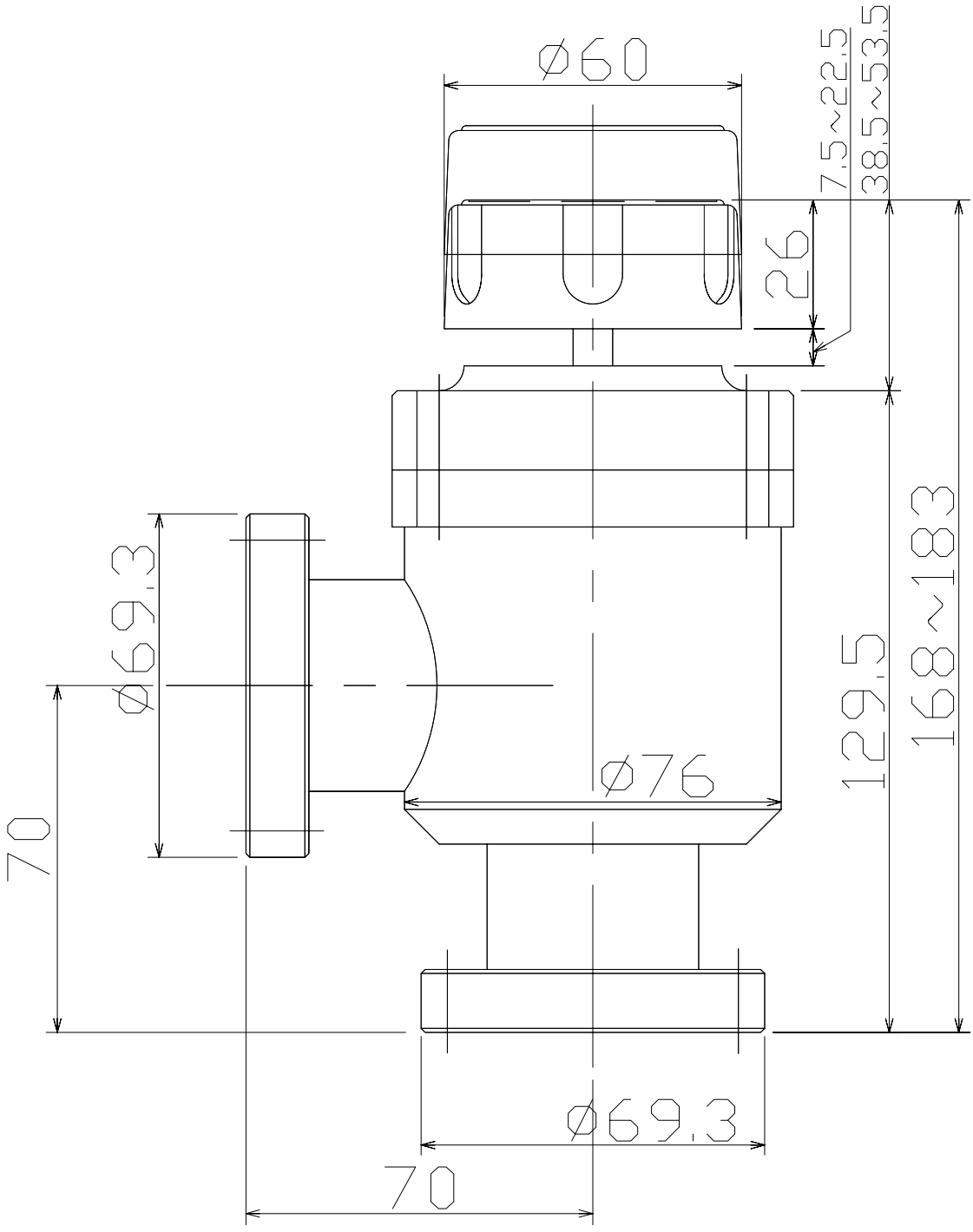
Ø60
7.5~22.5
38.5~53.5
26
Ø69.3
70
Ø76
129.5
168~183
Ø69.3
70